Mix and Match Vertical Garden

By **Wood Its Real**

Difficulty

Easy

You'd like to set up a garden but you don't have the space, the funds to get it started, or a green thumb to keep it alive. We can't help with the green thumb part, but we can assist with the other challenges with this project: a mix and match vertical garden.

Tools

Kreg Tools

Kreg 20V Ionic Drive™ Barrel Grip Jigsaw (Tool Only)

Kreg 20V Ionic Drive™ 1/2" Compact Drill (Tool Only)

Kreg 20V Ionic Drive™ 1/2" Compact Drill (Tool Only)

Kreg 20V Ionic Drive™ 5" Random Orbit Sander (Tool Only)

Other Tools

Table Saw

Tape Measure

Clamps

Materials

Wood Products

14 Board , 5/4" X 6" Decking Boards , 96"

Hardware & Supplies

1 Exterior Grade Wood Glue

1 1.5" Exterior Grade Screws

1 2.5" Exterior Grade Screws

6 Sets Of Exterior Grade Nuts/Bolts

1 Appropriate Bit For Deck Screws

1 Appropriate Bit For Bolts

Cut List & Parts

1 Base , 3' X 3'

1 Vertical Garden , 7' 10"

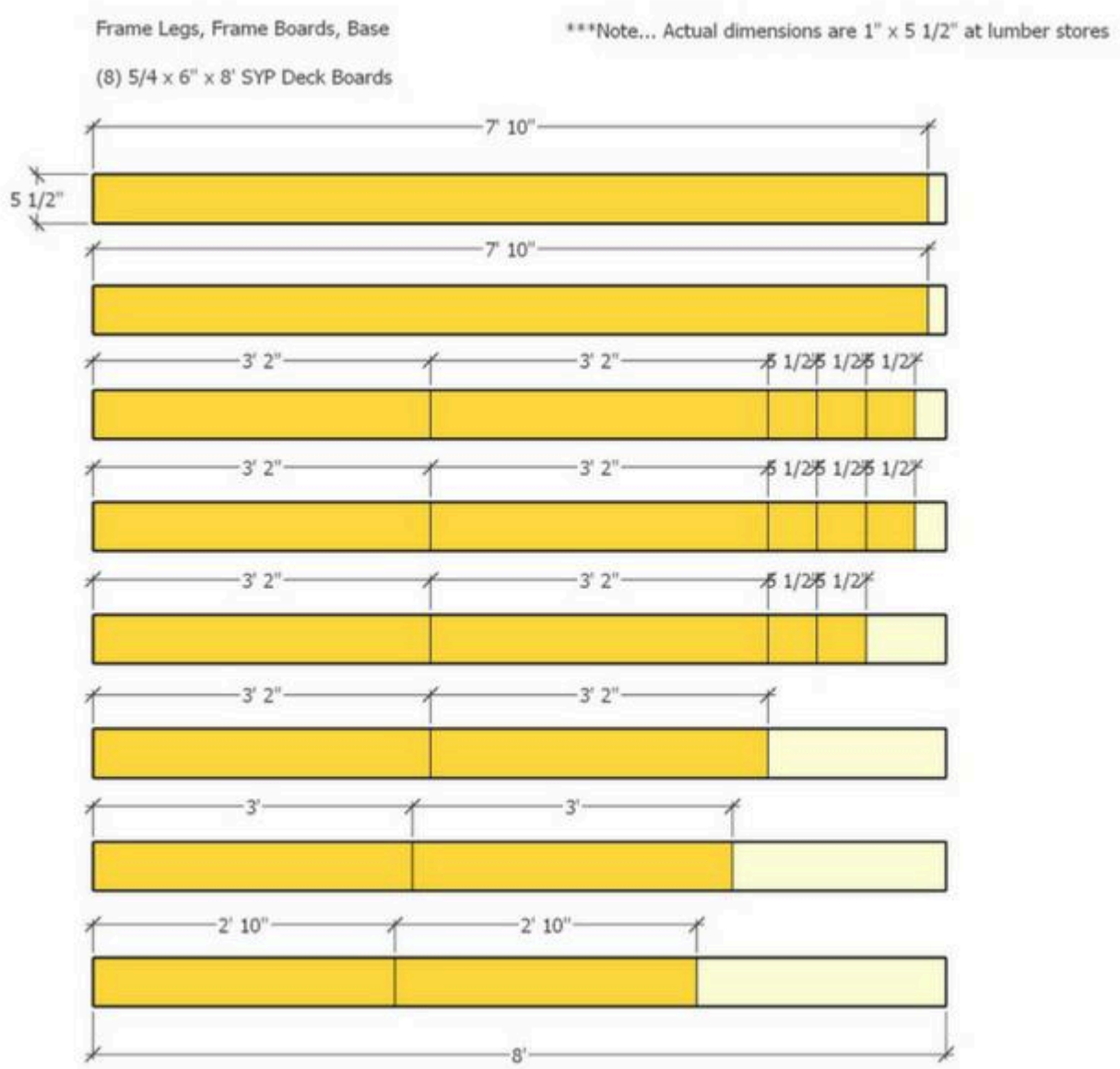

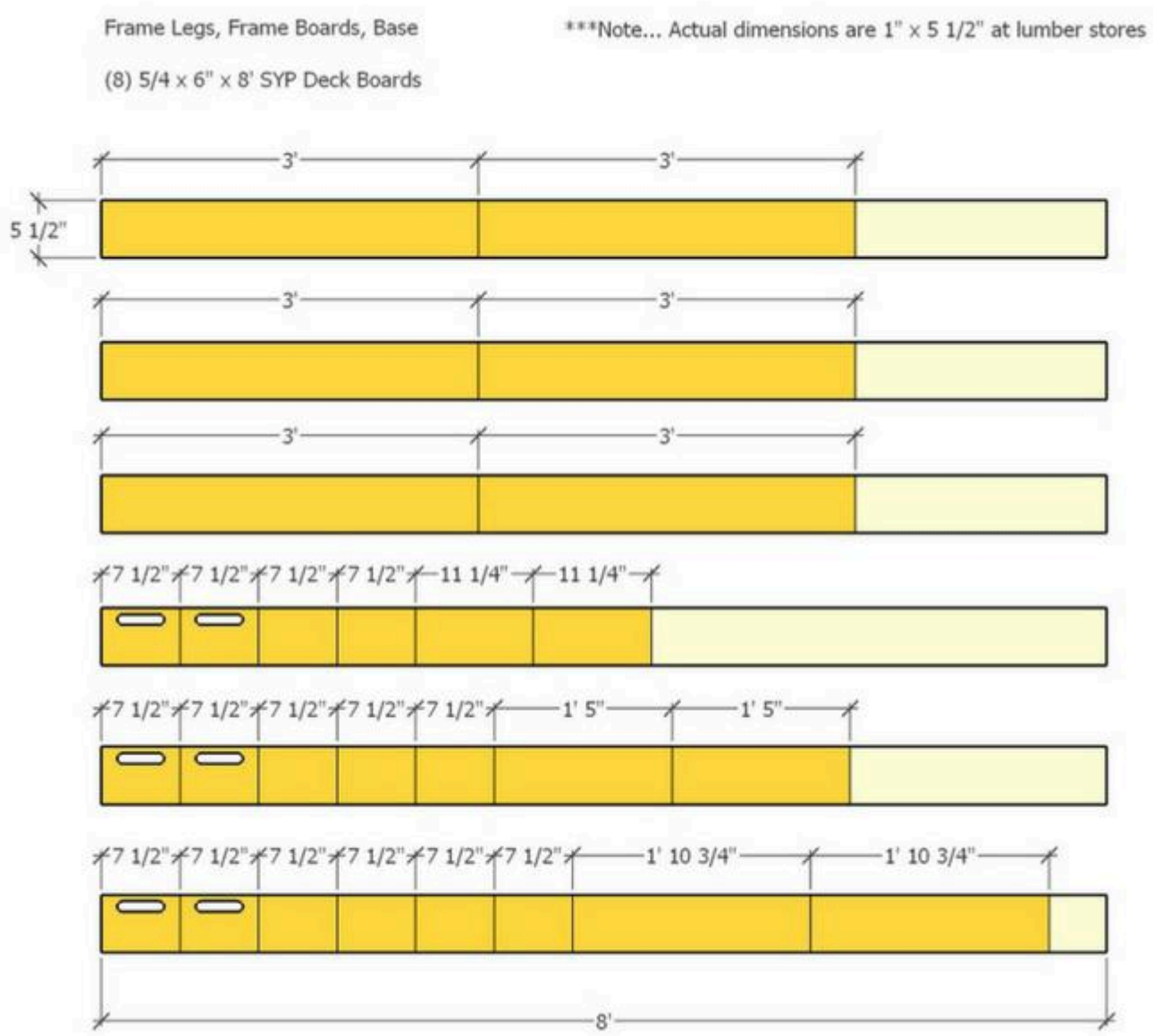

Directions

1 Construct Two Vertical Frame Sides

Cut two boards 7’10” long.

Cut a total of 8 smaller squares, 5.5" long.

Glue and screw the pieces on the boards 1.5 feet apart. Each side needs to be exactly the same so the “shelves” aren’t crooked.

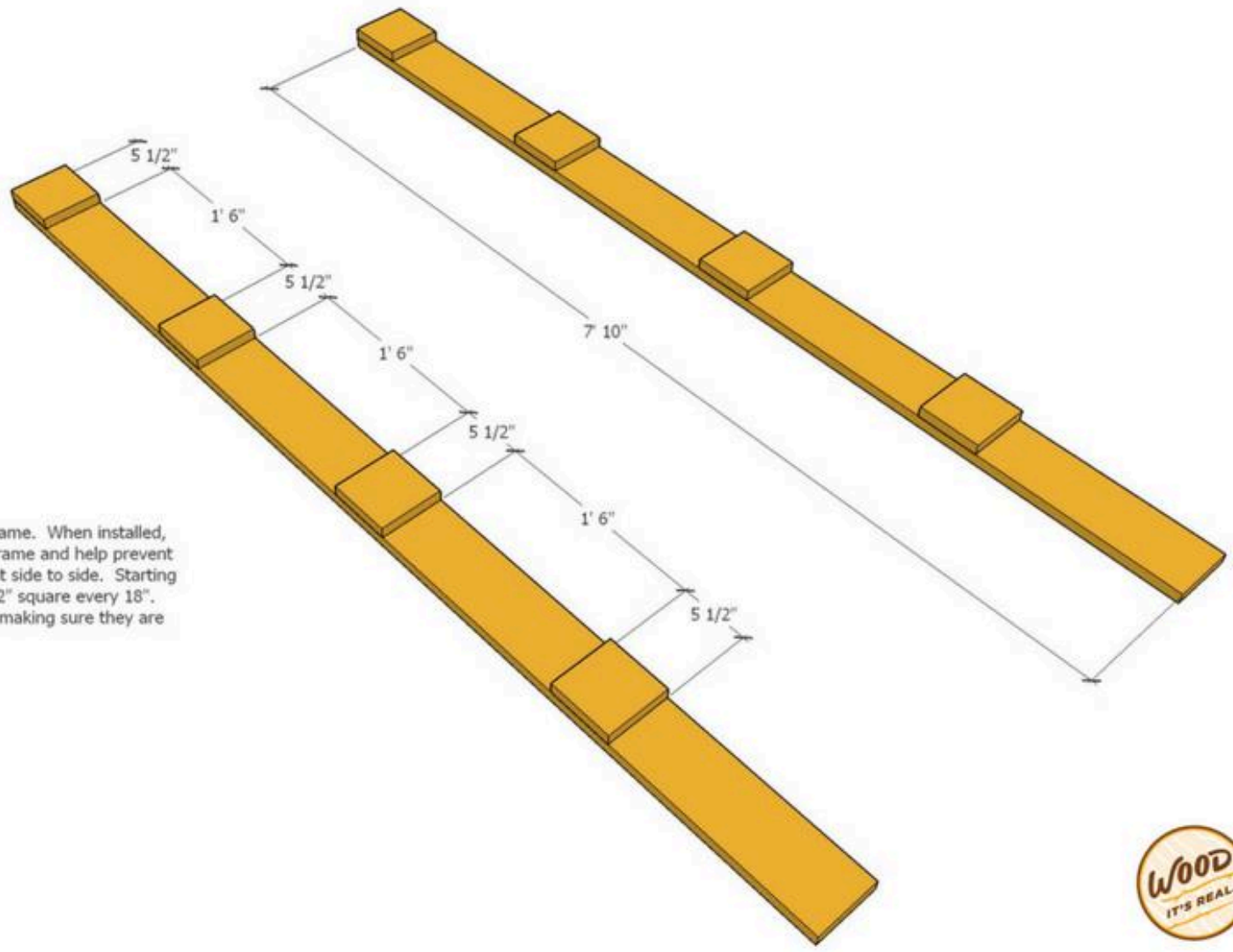

Start with the two sides of the frame. When installed, these boards will stiffen up the frame and help prevent racking and unwanted movement side to side. Starting from the top down, install a 5 1/2" square every 18". Do both sides at the same time, making sure they are exaactly the same.

2 Cut and Attach Braces/Shelves

Cut eight lengths, 3’2" each.

Place the boards so they’re in line with the smaller squares you attached.

Glue and screw the brace boards so they’re flush with the edge of the frame legs.

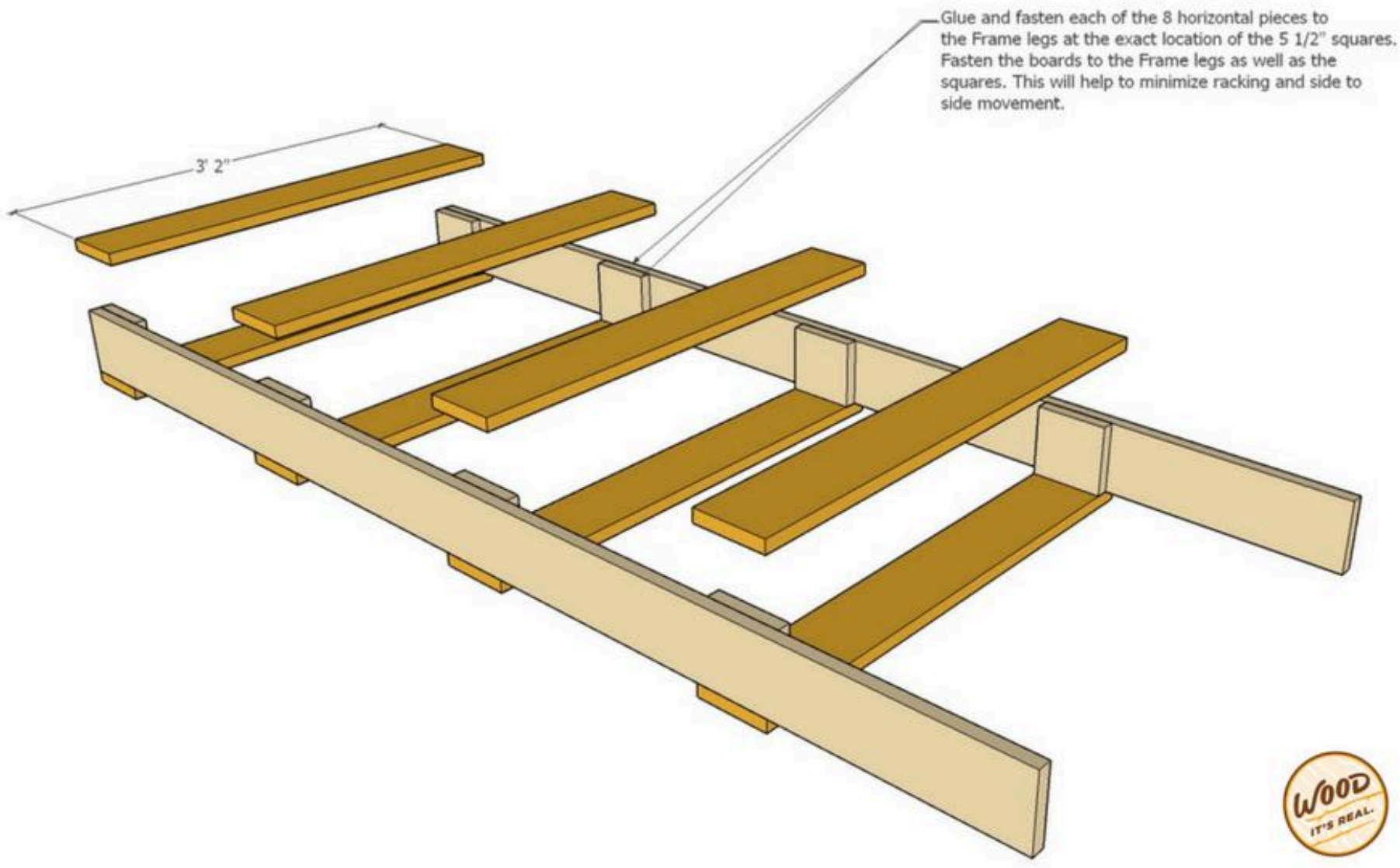

3 Build the Base

Cut two lengths 3' long

Cut two lengths 2'10" long

Glue and screw the boards together so the total dimensions are 3'x3'.

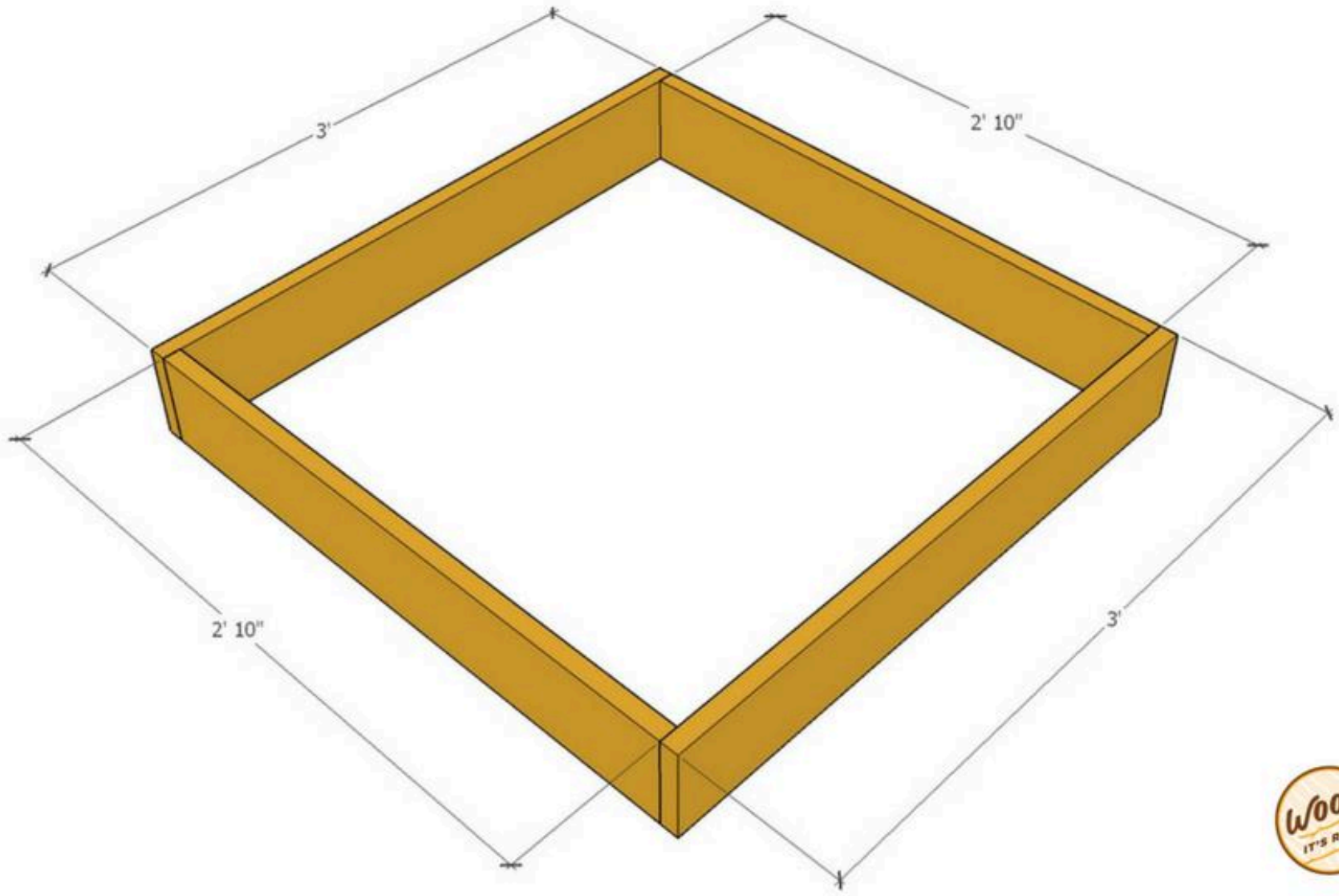

4 Attach the Vertical Garden Assembly

Center the frame on the base. If you're counting, the edges of the vertical board will be just over 1'3" from the outside edge. With the frame and base clamped together, drill holes for the bolts. Use a minimum of three bolts per leg to make the vertical garden more solid.

Attach the bolts and nuts.

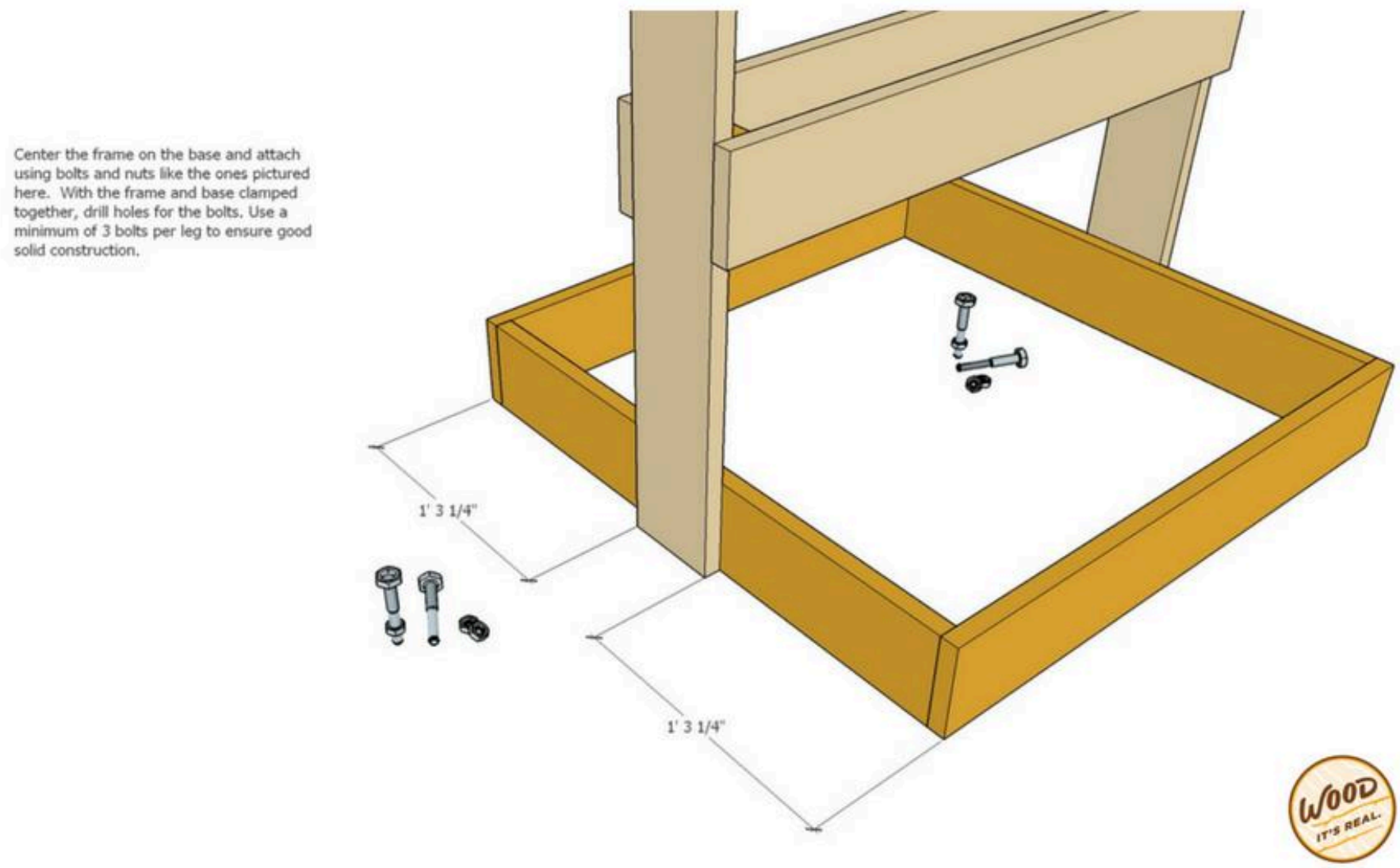

5 Lay the Base Boards

Cut six lengths 3' each.

If your square is slightly off, now is the time to fix it. Start with the two outside boards, and glue & fasten the top 3' boards on alternate edges to coerce everything into right angles.

Install the remaining boards with just under 1/2" gap between each one.

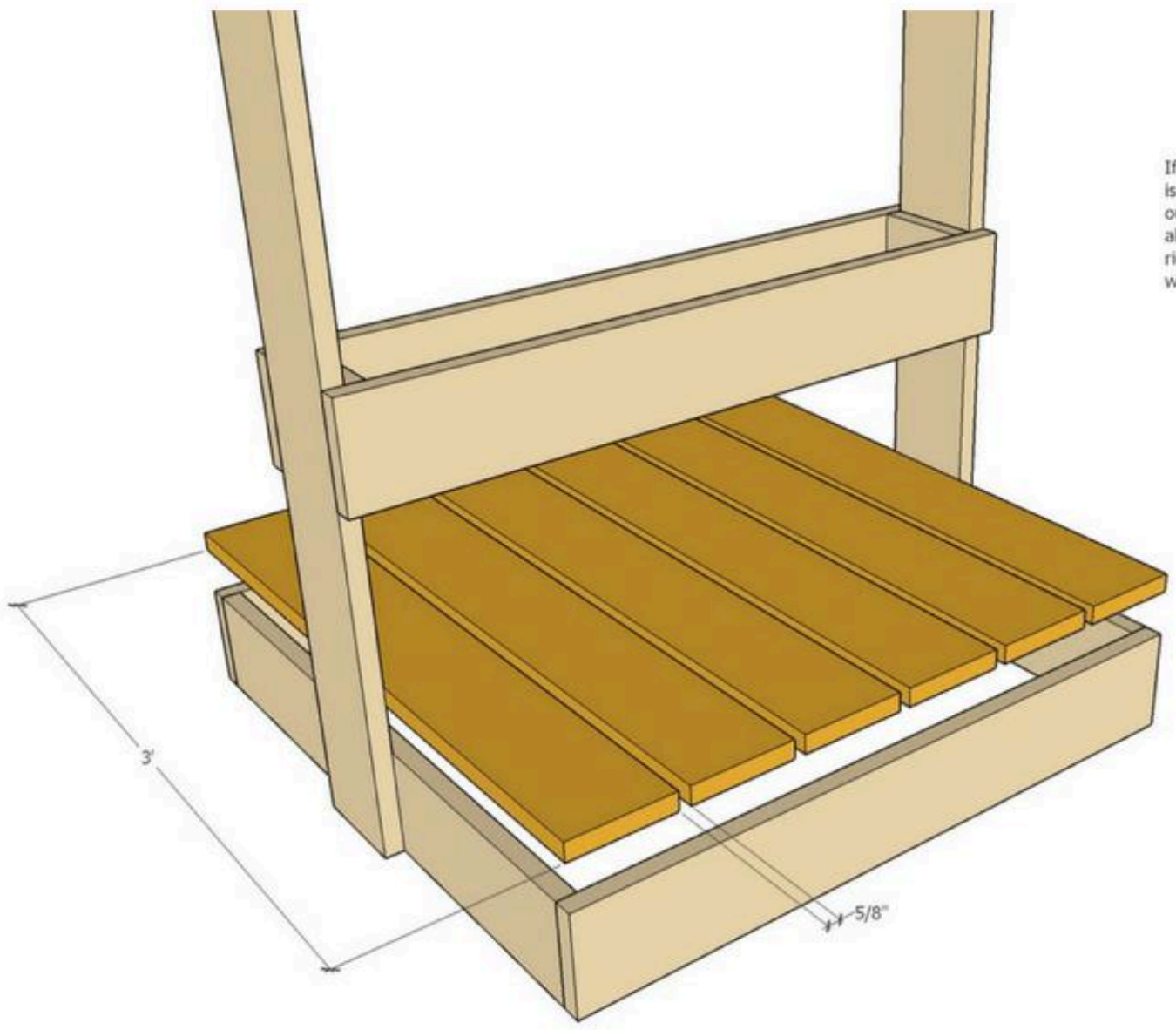

If the Base is slightly out of square, now is a good time to fix it. Start with the two outside boards, and glue & fasten them on alternate edges to coerce everything into right angles. Install the remaining boards with a roughly 5/8" gap in between each one.

6 Cut the End Pieces of the Boxes

Let's start with building one box. Then you can figure out how many/what sizes you want. More on that further down.

Pay attention to the grain direction on this. You want the grain to run side to side. For each box you build, cut the end pieces 7.5" inches long.

The handle holes are totally optional. If you have a jig saw or some other tricks up your sleeve, we suggest the handle hole be approximately an inch down from the top edge and 2" from each side. It can be 1" high and 3.5" wide.

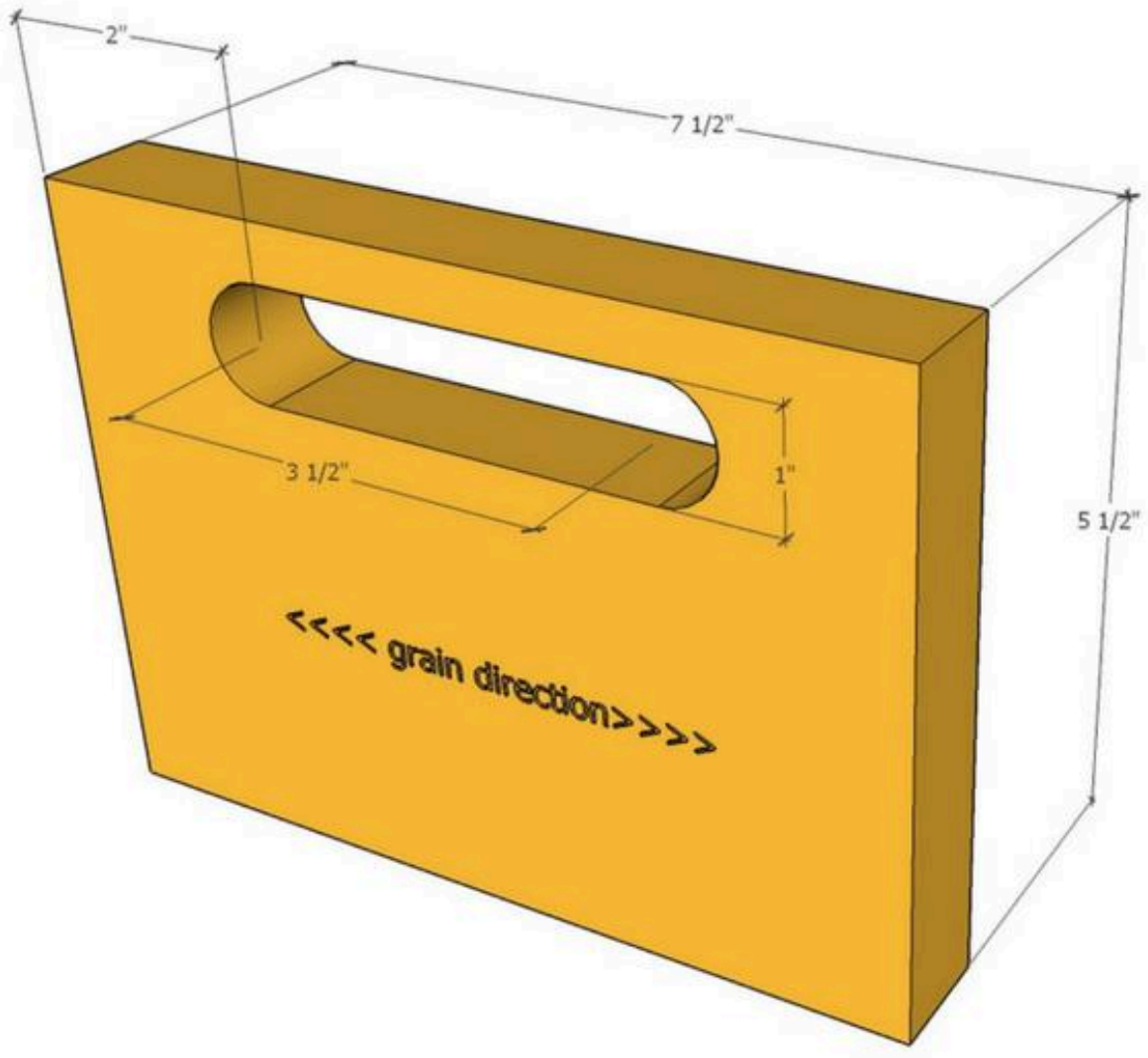

7 Cut the Sides of the Boxes

You can decide the sizes/number of garden boxes you want now or later.

Refer to this picture to help figure out what lengths of boxes mix and match well.

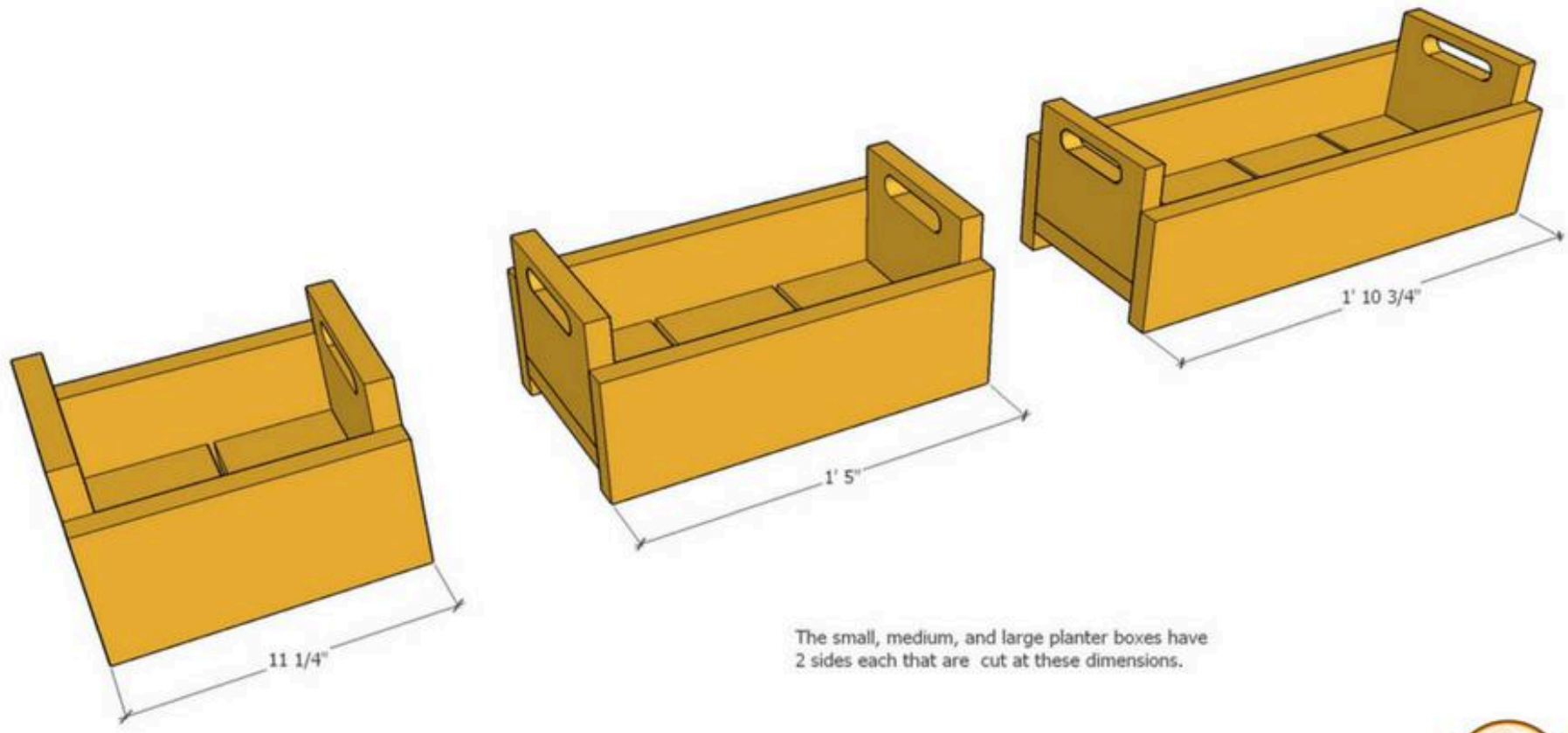

The small, medium, and large planter boxes have 2 sides each that are cut at these dimensions.

8 Cut the Bottom Pieces for the Box

The bottom pieces of all the planters are exactly the same size, 5.5" x 7.5". The only difference is the quantity per box. Cut how ever many you need for the boxes you build.

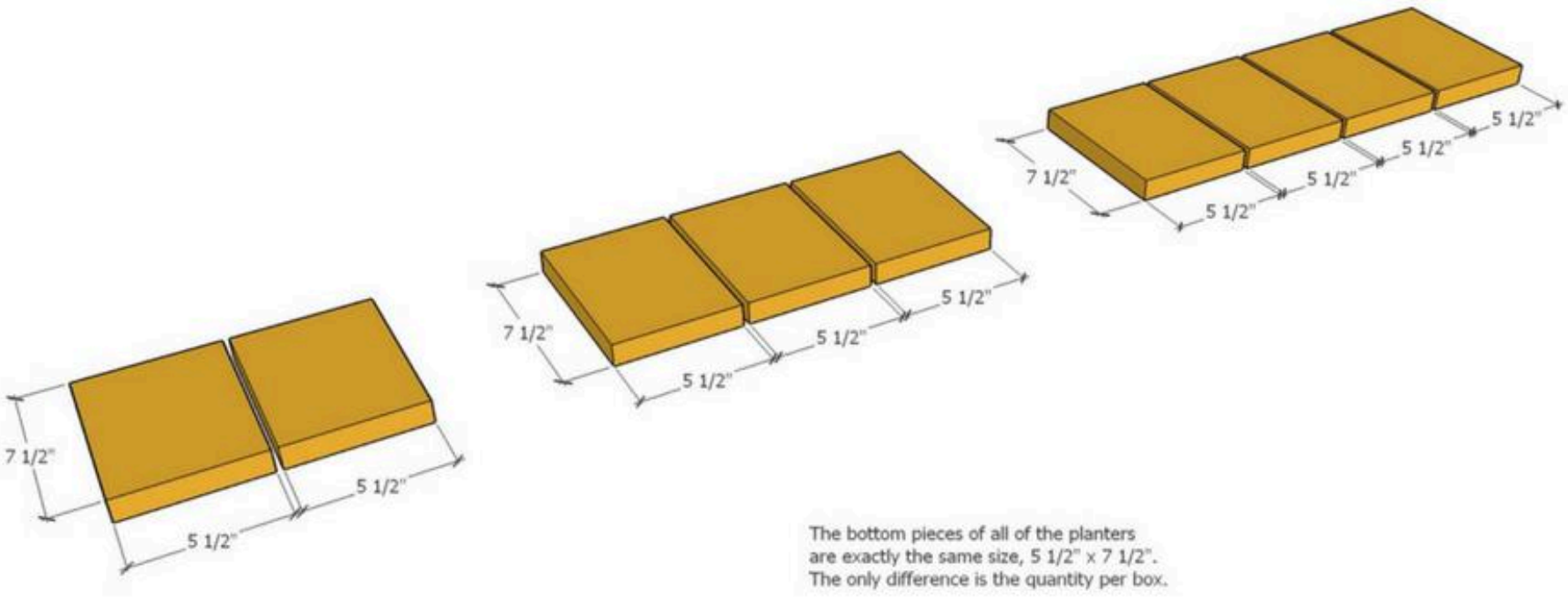

9 Assemble Sides and Ends of the Box

Start with two scraps of SYP stacked on top of each other to create a 2" block.

Set your handle sides on top of this block and your front and back lengths next to the block. Glue and fasten one end, but don't attach the scraps.

Repeat the same steps for the other side.

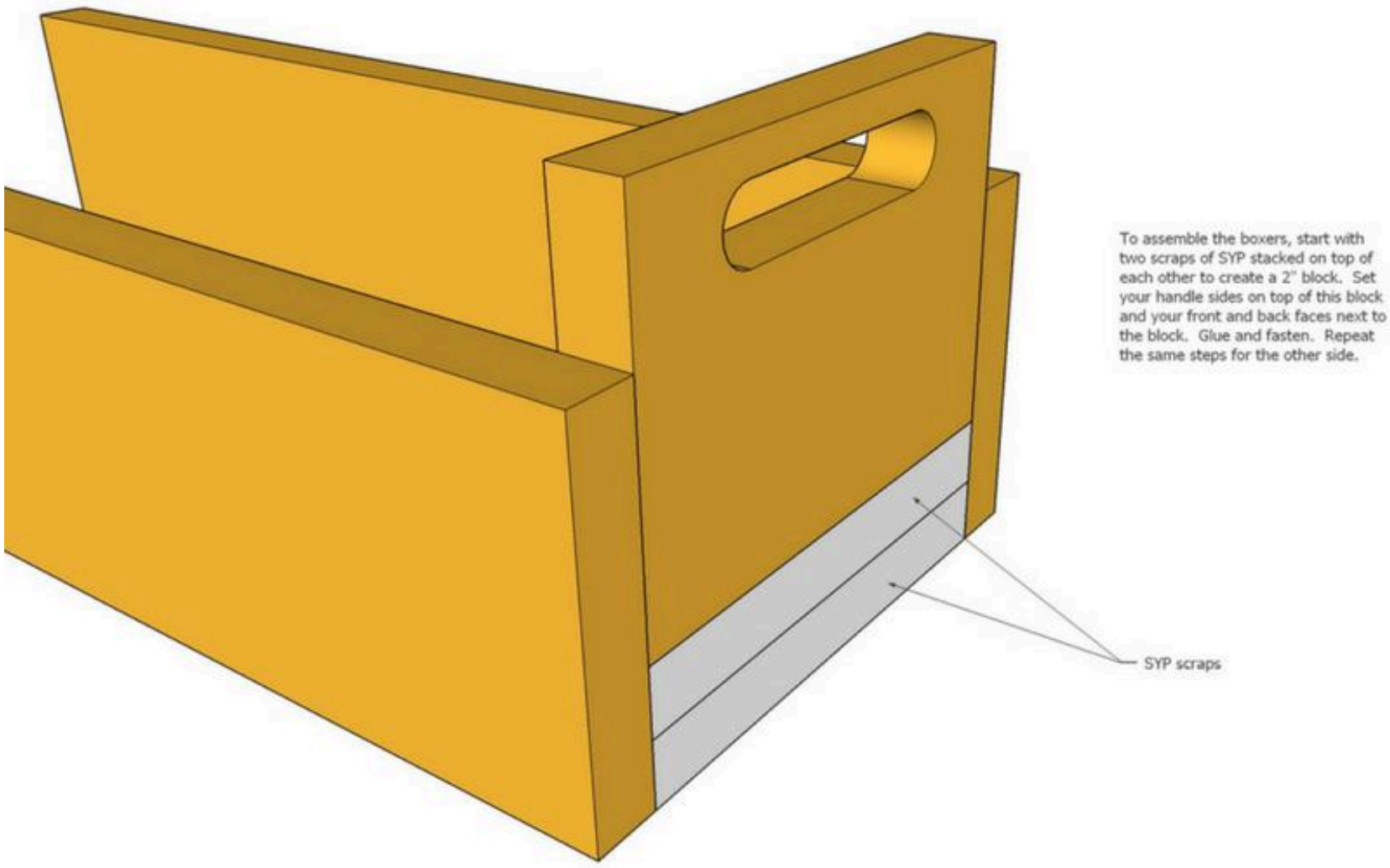

10 Install Bottom of Box

To install the bottom, turn the planter upside down.

Start with the two outside pieces glued and fastened flush with the sides.

Install the remaining boards with an approximately 1/4" gap between to help water drainage.

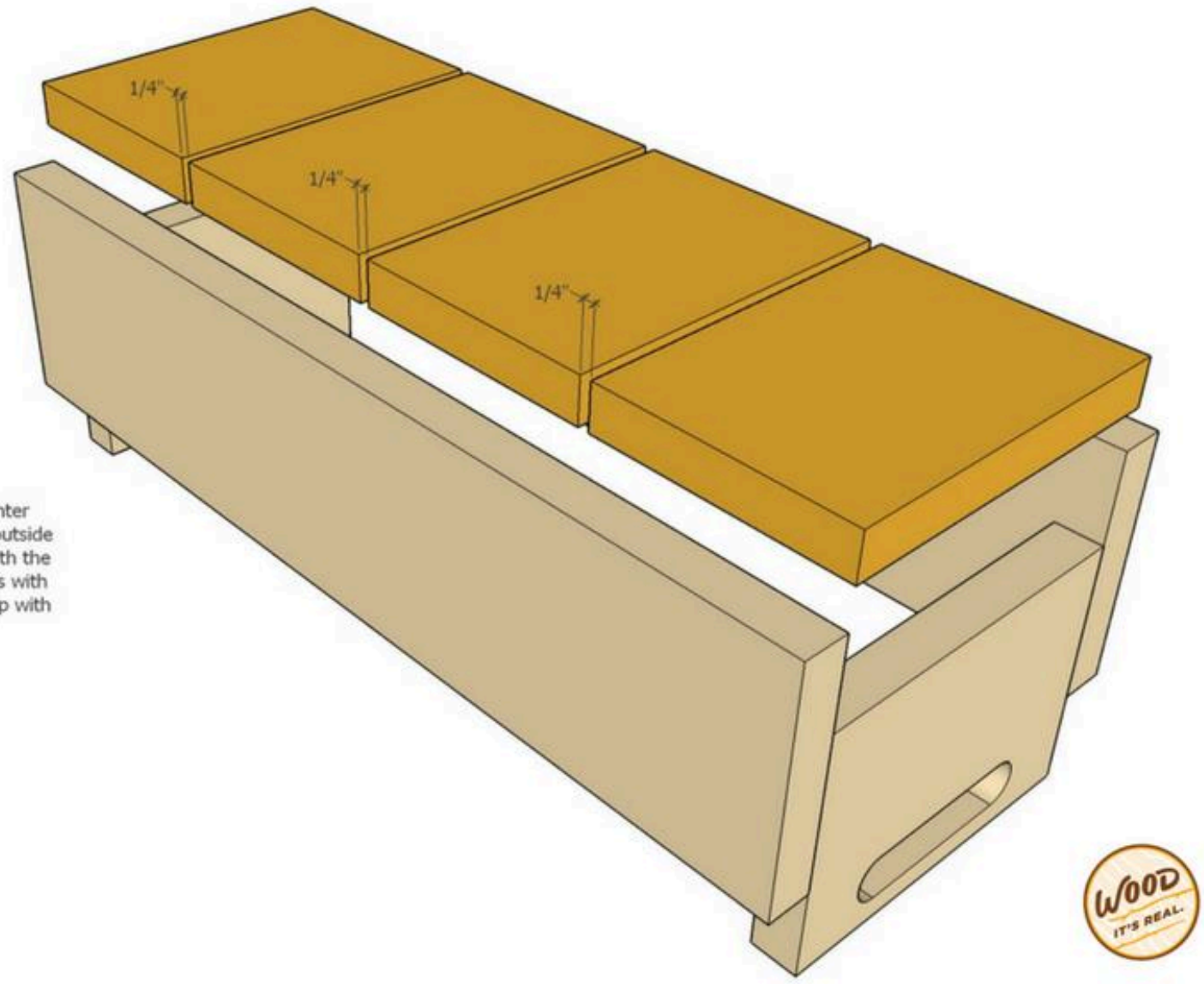

To install the bottom, turn the planter upside down. Start with the two outside pieces glued and fastened flush with the sides. Install the remaining boards with roughly a 1/4" gap between to help with water drainage.

11 A Properly Built Box

When assembled correctly, the face and back will extend 1" lower than the bottom. This creates a runner that allows the planter to rest on the shelf and slide back and forth.

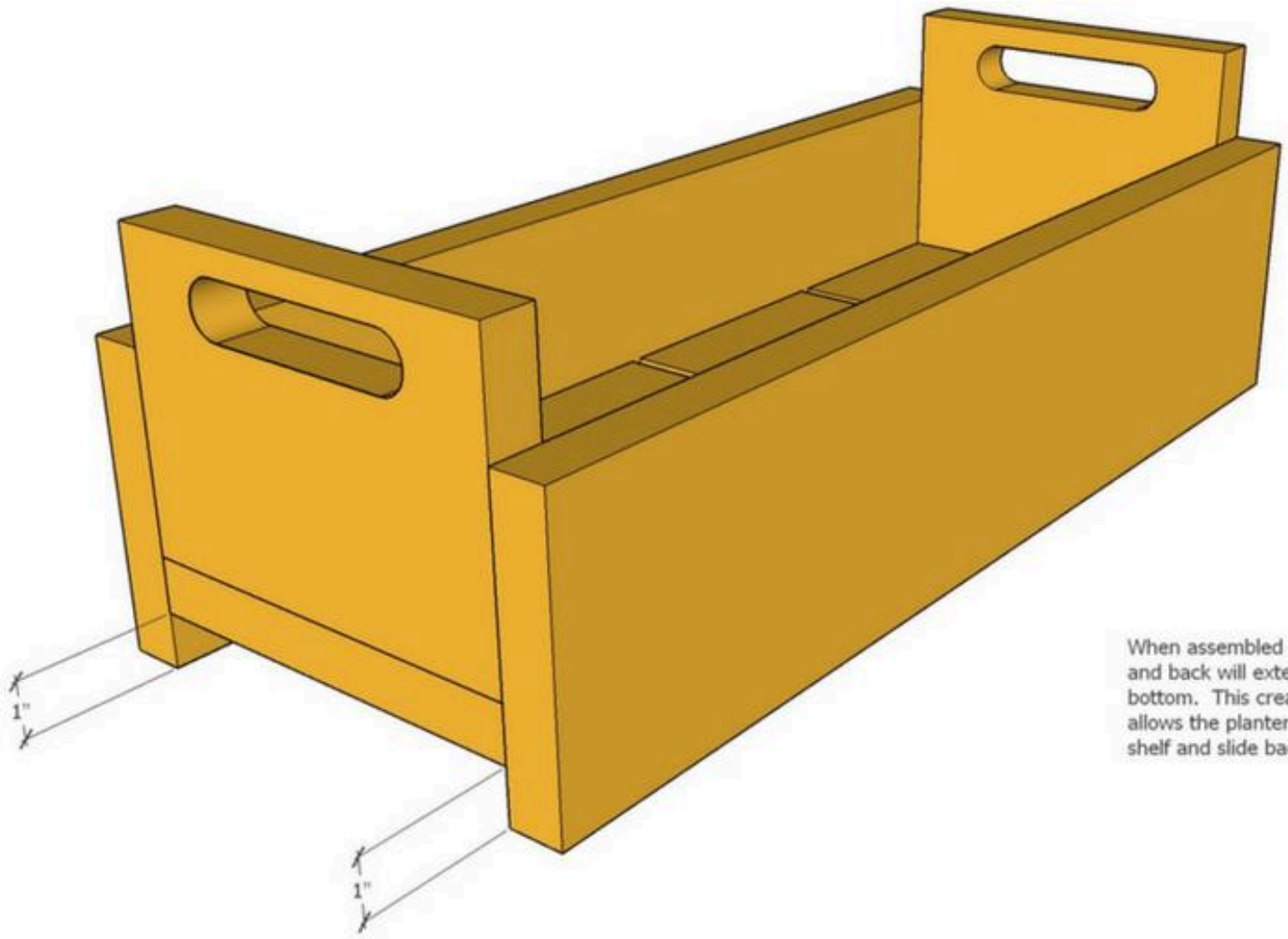

When assembled correctly, the face and back will extend 1" lower than the bottom. This creates a runner that allows the planter box to rest on the shelf and slide back and forth.

12 Build the Rest of the Boxes

Follow the previous steps to assemble the rest of your boxes using whichever configuration you want.

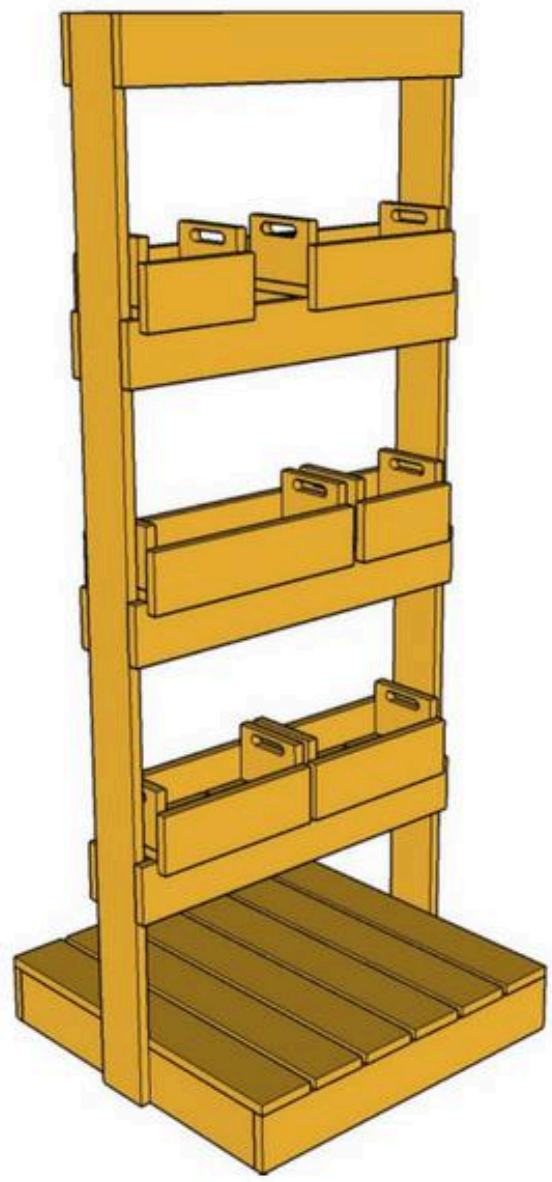

13 Get Some Dirt and Start Planting

Get some planting soil and some seeds or plants.

Fill your planter boxes with all of that goodness and enjoy your new garden.